Modelo DML801 LED FLASHLIGHT

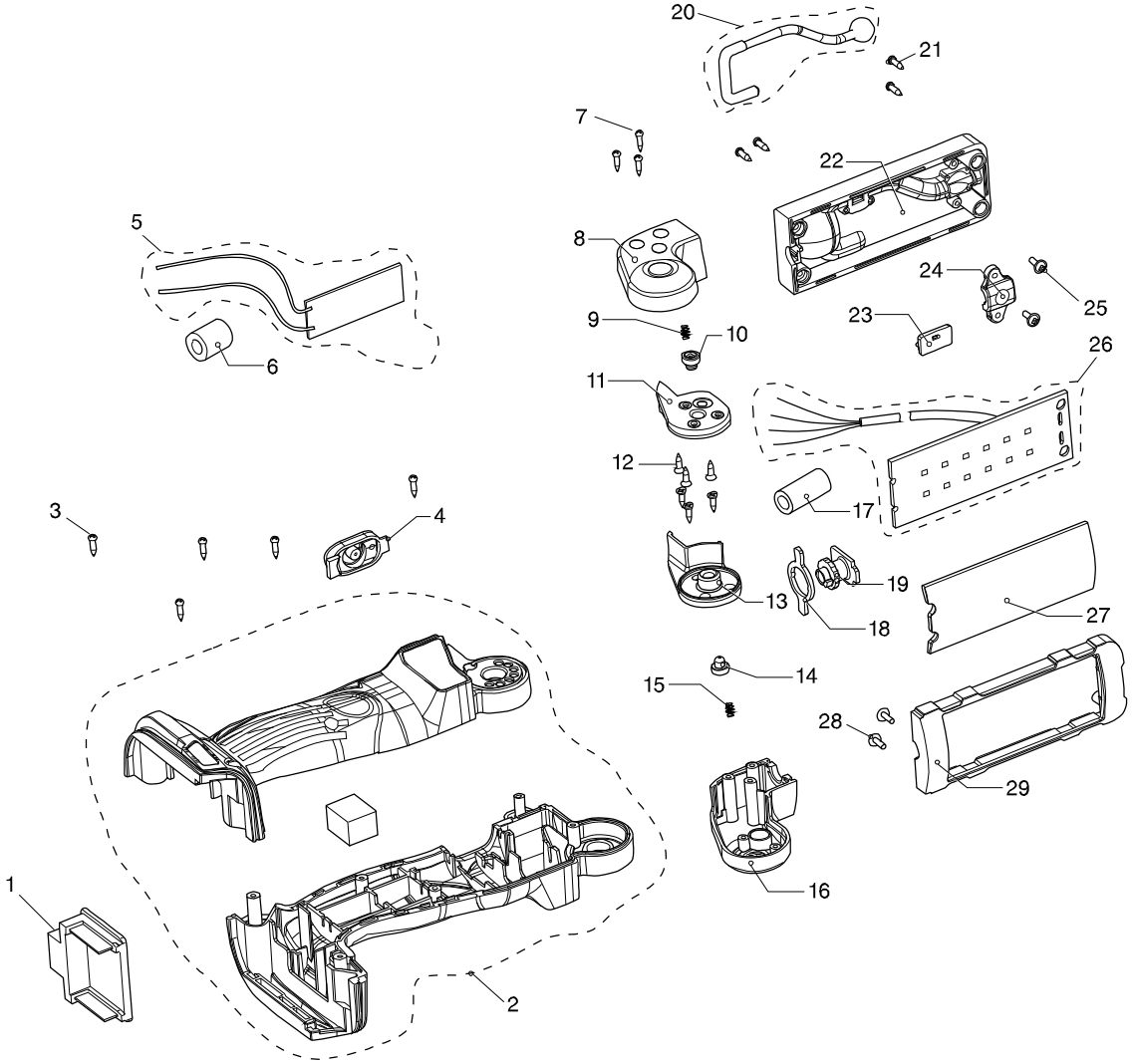

Modelo DML801 LED FLASHLIGHT

Artículo	Código	Descripción	Interc	Cantidad	N/O	Ventas	Compra	Notas
001	GM00001117	BATTERY HOLDER C2010239007		1				
002	GM00001287	HOUSING R/L(G0180100105)		1				
003	GM00001269	SCREW 3X12PB(B0130120202)		1	*			
003-1	GM00001269	SCREW 3X12PB(B0130120202)	<	5				
004	GM00001285	SWITCH HOLDER ASSY(G0180100103		1				
005	GM00001286	MAIN CIRCUIT ASSY(G0180100104)		1				
006	GM00001266	MAGNET RING(B)(A2301005900)		1				
007	GM00001269	SCREW 3X12PB(B0130120202)		3				
008	GM00001273	LEFT ROTATOR (C0120801005)		1				
009	GM00001270	SPRING (B1214801020)		1				
010	GM00001279	SPRING LID (C1020801001)		1				
011	GM00001271	ROTATOR BRACKET L(C0120801003)		1				
012	GM00001268	SCREW 2.6X10KA(B0126100121)		6				
013	GM00001272	ROTATOR BRACKET R(C0120801004)		1				
014	GM00001279	SPRING LID (C1020801001)		1				
015	GM00001270	SPRING (B1214801020)		1				
016	GM00001274	RIGHT ROTATOR (C0120801006)		1				
017	GM00001265	MAGNET RING(A)(A2301005800)		1				
018	GM00001282	FIX PLATE (C3020801001)		1				
019	GM00001280	TURNING SHAFT (C1020801002)		1				
020	GM00001283	HOOK ASSY (G0180100101)		1				
021	GM00001269	SCREW 3X12PB(B0130120202)		4				
022	GM00001276	REAR CASE HEAD (C0120801008)		1				
023	GM00001278	HOOK LATCH COVER(C0120801010)		1				
024	GM00001277	HOOK HOLDER (C0120801009)		1				
025	GM00001267	SCREW 2.6X8PWB(B0126080006)		2				
026	GM00001284	LED CIRCUIT ASSY(G0180100102)		1				
027	GM00001281	LENS (C1020801003)		1				
028	GM00001267	SCREW 2.6X8PWB(B0126080006)		2				
029	GM00001275	FRONT CASE HEAD(C0120801007)		1				
A01	GM00001288	SHOULDER HOOK SET G0180100100		1				